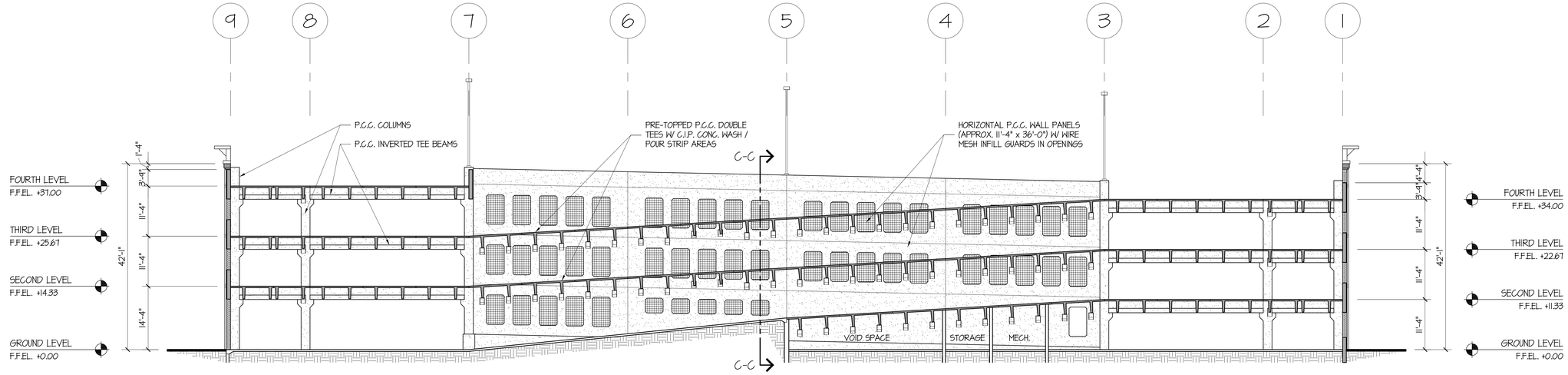

LONGITUDINAL SECTION A-A

SCALE: 3/32" = 1'-0"

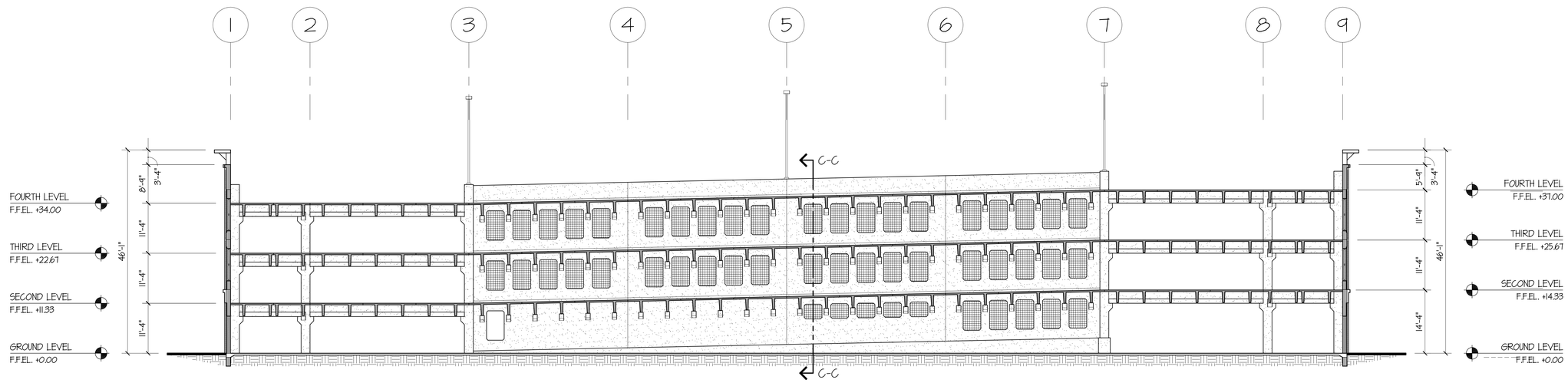

LONGITUDINAL SECTION B-B

SCALE: 3/32" = 1'-0"

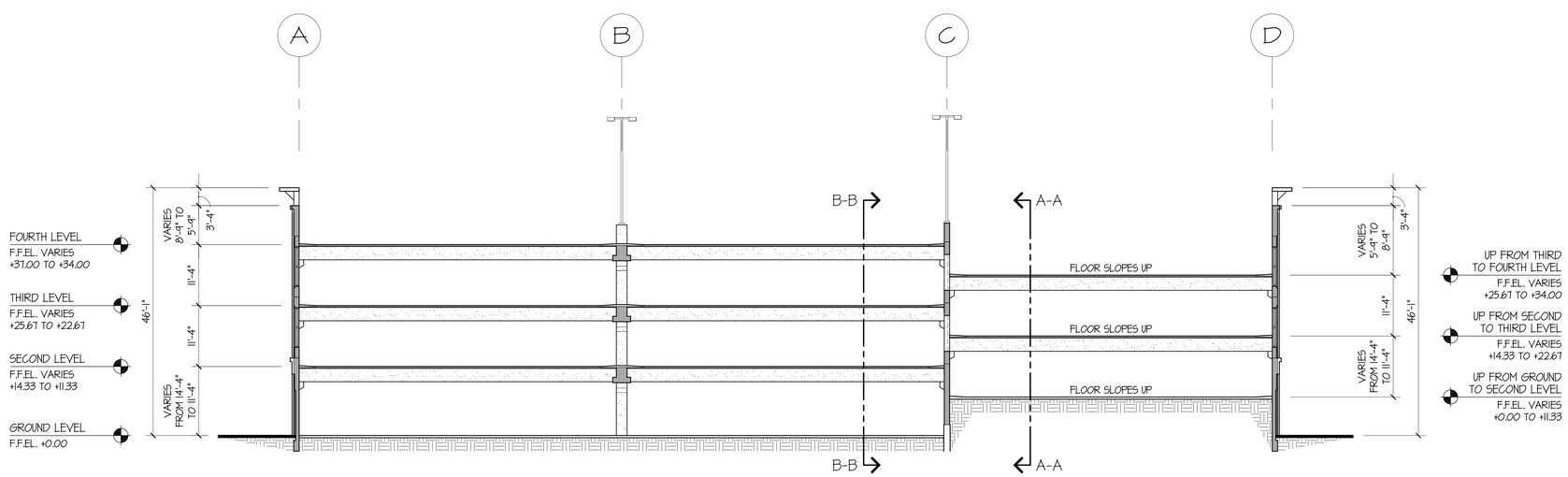

CROSS SECTION C-C

SCALE: 3/32" = 1'-0"

OLD TOWN PARKING DECK

TRAVERSE CITY, MICHIGAN

RICH & ASSOCIATES
Parking Consultants
Architects · Engineers
Planners
26877 Northwestern Hwy., Suite 208
Southfield, Michigan 48033
Tel: 248.353.5080
Fax: 248.353.3830
Lutz, Florida
Tel: 813.949.9860
www.RichAssoc.com

ARCHITECTS CWS
513 South Union
Traverse City, Michigan
231.946.3627 Voice 231.946.1234 Fax

Date	ISSUED FOR:	By
05-29-09	SCHEMATIC PACKAGE	

Sheet Title:

SECTIONS

Drawn By	PMH
Checked By	MJJ
File Name	0923A-4_1
Plot Date	05-29-09

Detail Number / Detail Sheet

All matter contained hereon, including drawings, written matter, ideas or concepts, are the creation of Rich and Associates, Inc. for the specific project and shall remain the property of Rich and Associates, Inc. No disclosure thereof or any form whatsoever shall be made to any other person or business, agency or organization, including news media without the written consent of Rich and Associates, Inc. except as required for the physical completion of the specific project.

File No	0923
Date	05-29-09
Scale	AS NOTED
Last Rev.	

Sheet Number:

A - 4.1